RFID system ID 15

Mounting kits for read/write head, ID 15/SLK

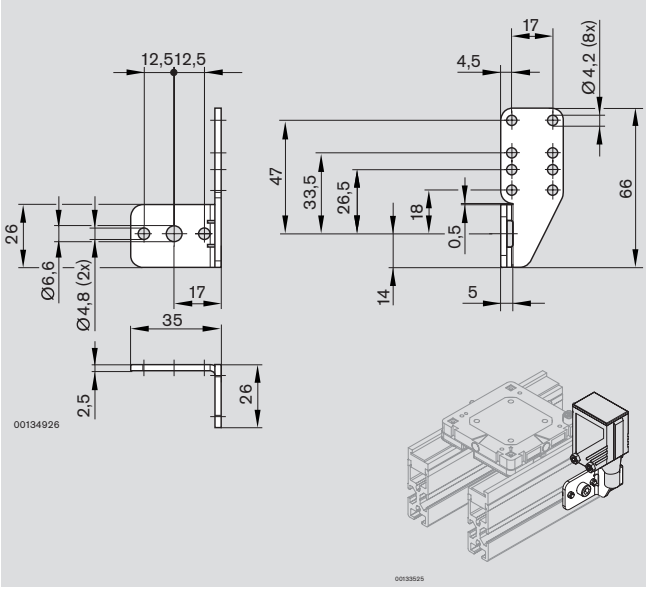

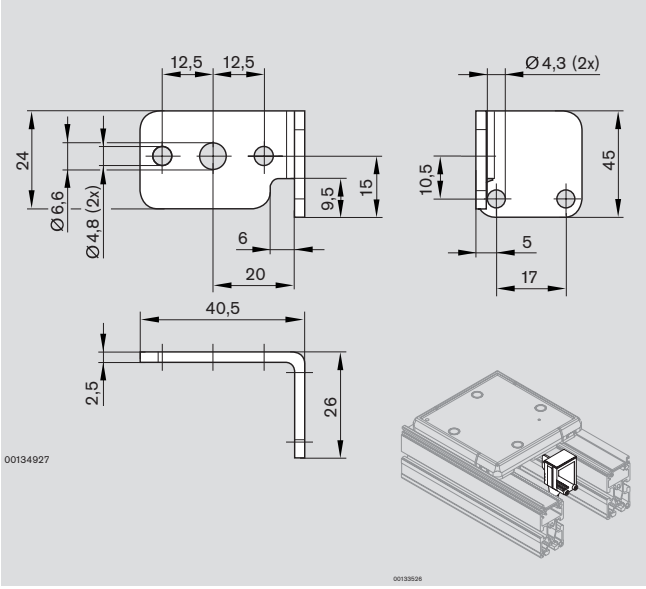

Mounting kit ID 15/MS-1

	No.
ID 15/MS-1	**3 842 535 920**

Mounting kit ID 15/MS-2

	No.
ID 15/MS-2	**3 842 535 917**

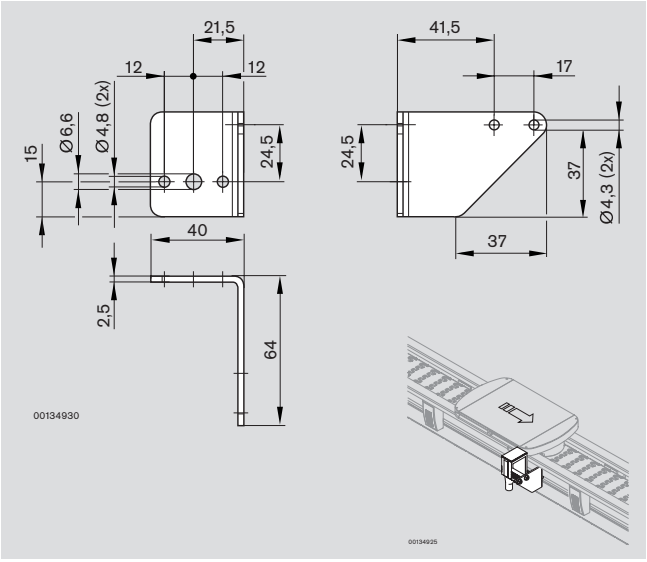

Mounting kit ID 15/MS-5

	No.
ID 15/MS-5	**3 842 535 918**