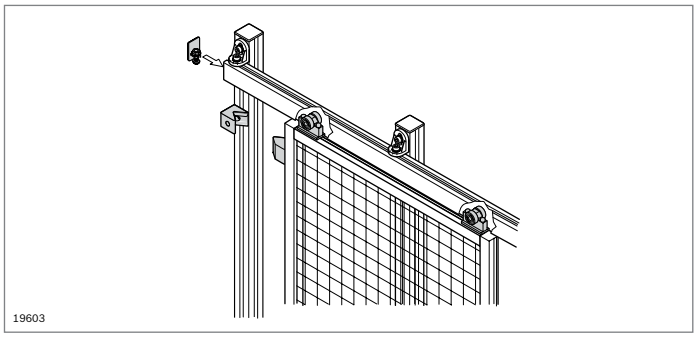

Profile rail, trolley

- Profile rail and trolley for movable mounting of parts, e.g. for use as a screwdriver hanger at work tables or for EcoSafe sliding doors (p. 10-14)

Accessories:

See page 12-4

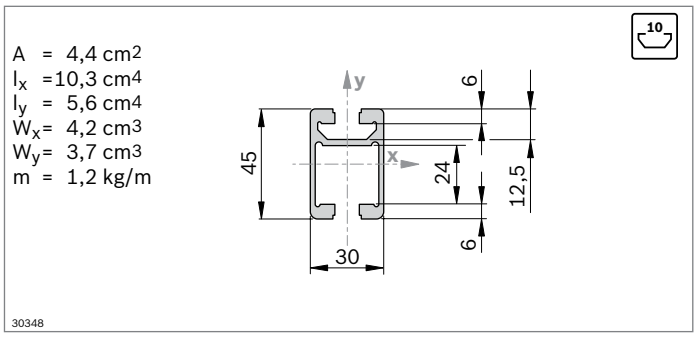

Profile rail 30x45C	L (mm)	No.
1 pcs	50 ... 5600	**3 842 992 946 / L**
20 pcs	5600	**3 842 523 598**

Material: aluminum, anodized

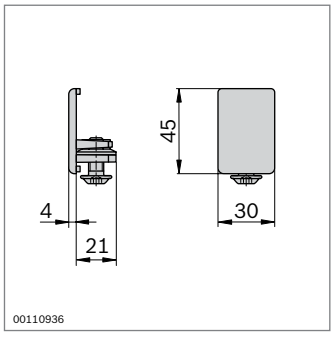

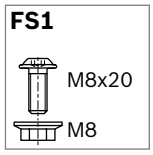

- Profile rail end piece for use for trolley as a cover cap with stop
- With screw protection

End piece 30x45C	Color	ESD		No.	FS
	Signal gray		20	**3 842 554 710**	FS1
	Black		20	**3 842 554 711**	FS1

Material: End piece: PA
Fastening material: steel; galvanized

Scope of delivery: incl. fastening material (FS)

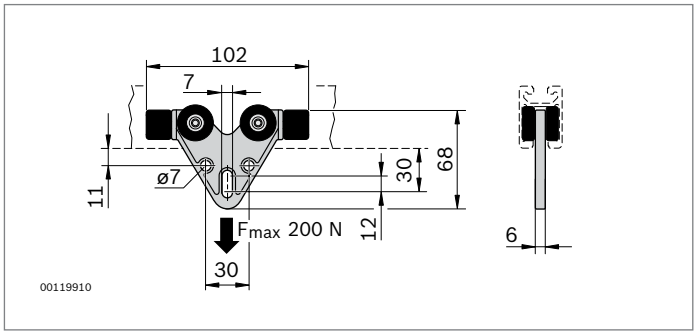

- Trolley with ring, e.g. for suspending a spring hook

Trolley for profile rail 30x45C	No.
	3 842 521 510

Material: injection molded plastic

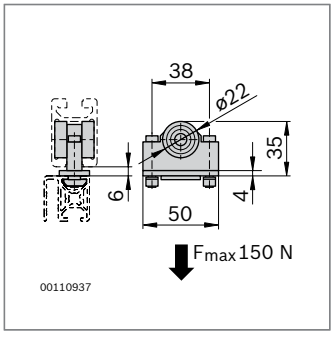

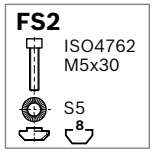

- Trolley with dust-proof ball bearings for smooth sliding motion
- For fastening profiles with a 8 mm slot

Trolley	No.	FS
	3 842 524 153	2xFS2

Material: PA, black / steel, galvanized
Fastening material: steel; galvanized

Scope of delivery: incl. fastening material (FS)